United States Department of Agriculture
Natural Resources Conservation Service

USDA NRCS

Renewable Energy
Solar Energy Primer

Presenters

- Curtis Framel, Energy Specialist
  - (503) 273-2437
  - Curtis.Framel@por.usda.gov
- Peter Robinson, Water Mngt Engineer
  - (503) 273-2417
  - Peter.Robinson@por.usda.gov
- Charles Zuller, Environmental Engineer
  - (503)273-2423
  - Charles.Zuller@por.usda.gov

Renewable Energy Definition

Renewable energy is naturally replenished energy generated from natural resources such as sunlight, wind, rain, tides, biomass, and geothermal heat.

Solar Applications:

- Generate electricity using photovoltaic solar cells.
- Generate electricity using concentrating solar power.
- Generate electricity by heating trapped air which rotates turbines in a solar updraft tower.
- Generate hydrogen using photoelectrochemical cells.
- Heat water or air for domestic hot water and space heating needs using solar-thermal panels.
- Heat buildings, directly, through passive solar building design.
- Heat foodstuffs, through solar ovens.
- Solar air conditioning.
- Desalination of brackish water.

Solar Technologies

- Active Systems
  - Photovoltaic (PV) systems
  - Pump fluids through solar collector
  - Heating and cooling (desiccants or absorption)
- Passive Systems
  - Orientation to sunlight and shading
  - Natural convection

Thermal Concentrators

- Large power plants
- Sodium based

Agricultural Applications

- Pump water
- Dry grain
- Heat greenhouse
- Generate electricity
- Space heating & cooling

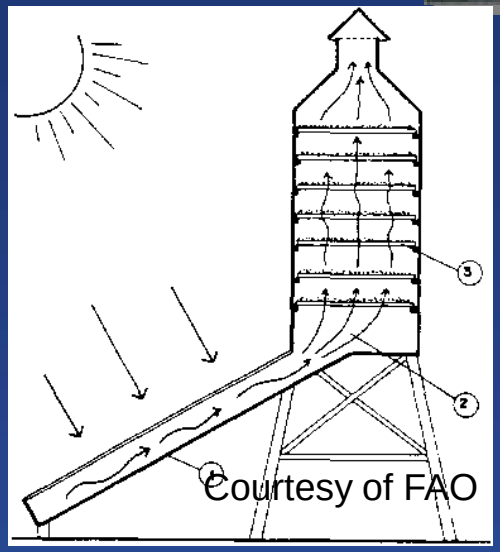

Applicable Conservation Practice Standards

- Pumping Plant (533)
- Watering Facility (614)
- Pipeline (516)
- Water Well (642)

PV System - Solar Cells

- Crystalline
  - Silicon wafer
  - $3.50 to $4.25 per watt
  - Silicon intensive
  - 14 – 16% efficiency
- Thin film
  - Si, CdTe, CuIn, etc
  - $2.50 - $5.50 per watt
  - 8 – 11% efficiency
- Solar Thermal Efficiencies approx. 80%

Radiant Energy to Electricity

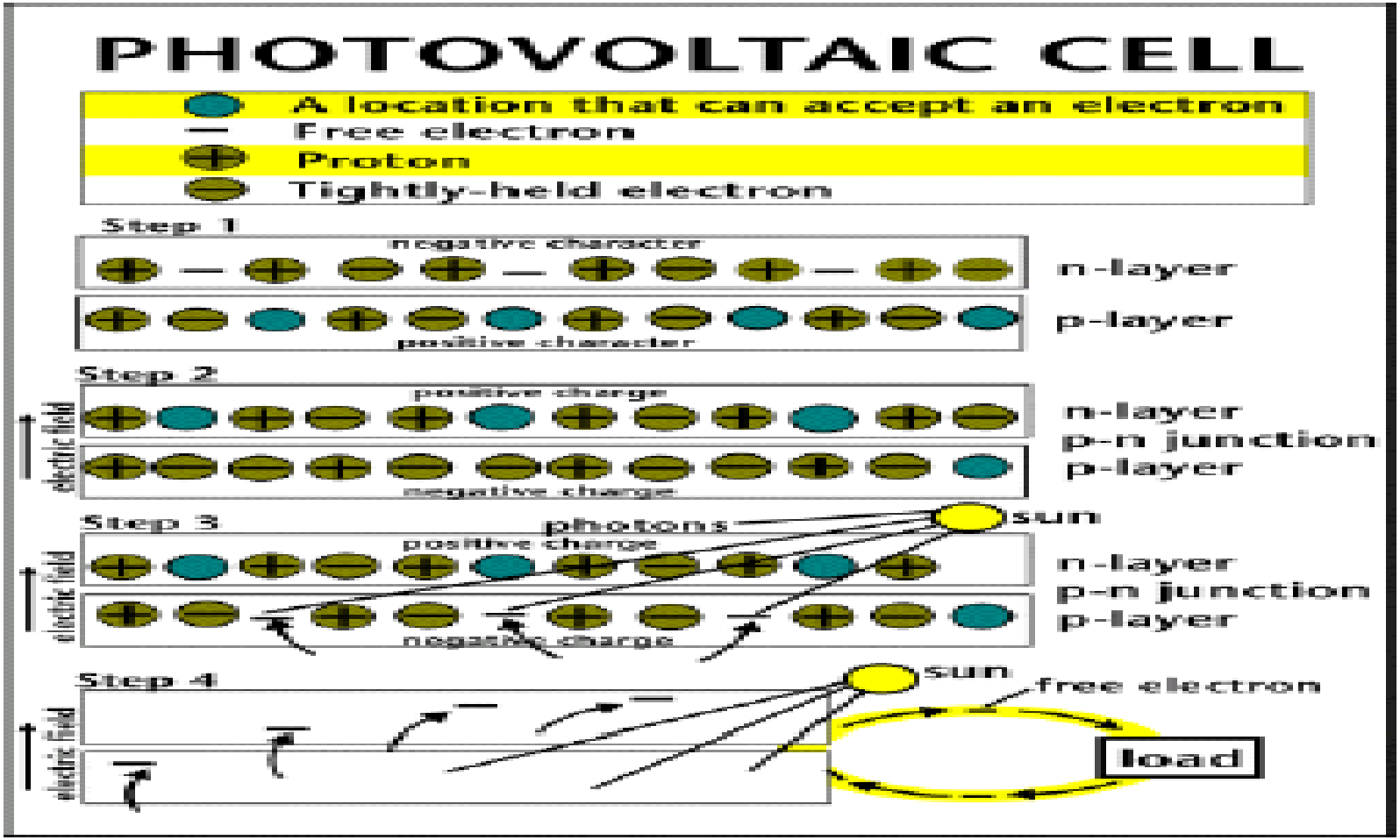

Solar Arrays

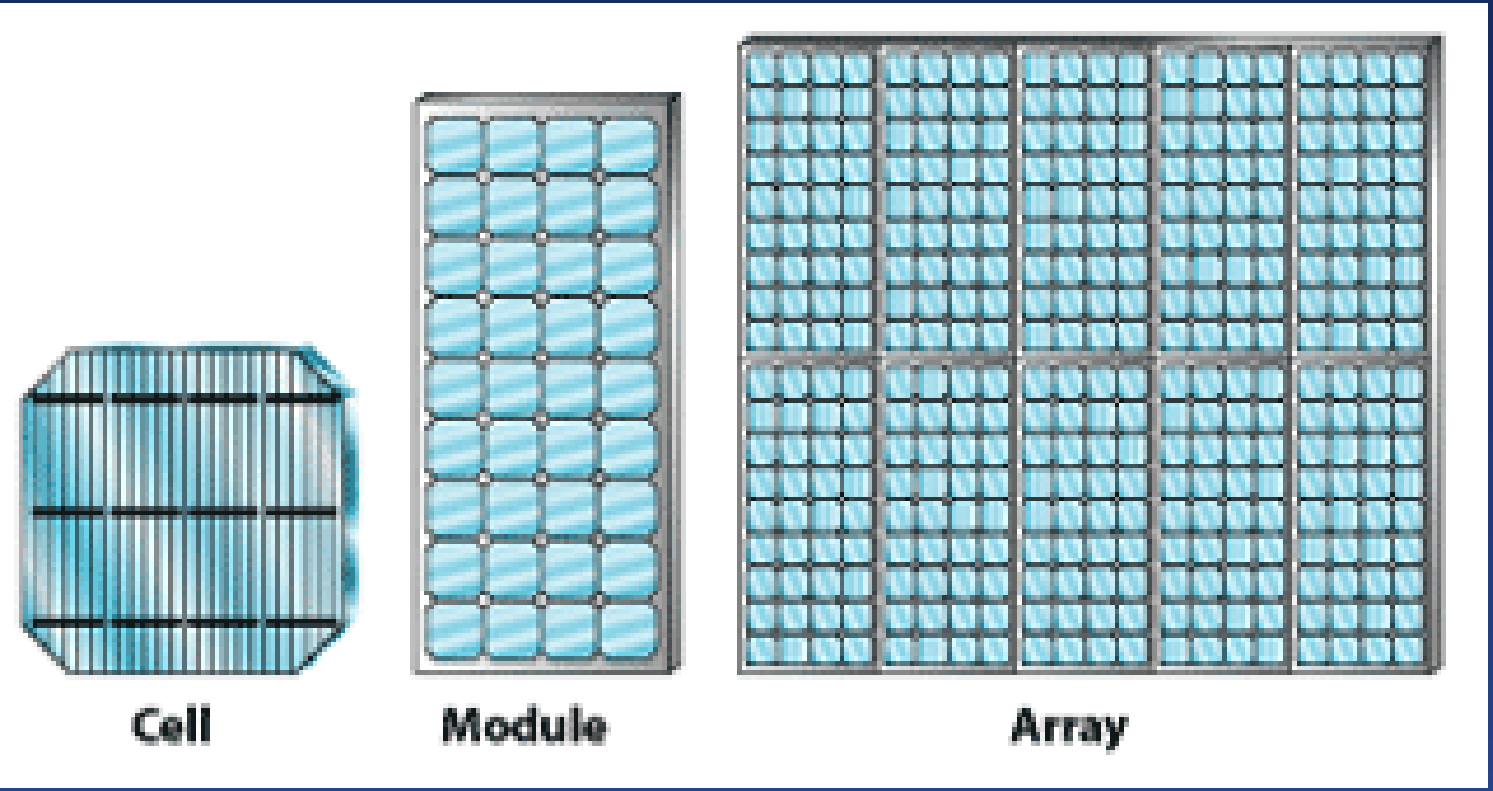

PV Systems

- Off-grid systems (battery backup)
- Grid-tie (no battery) systems

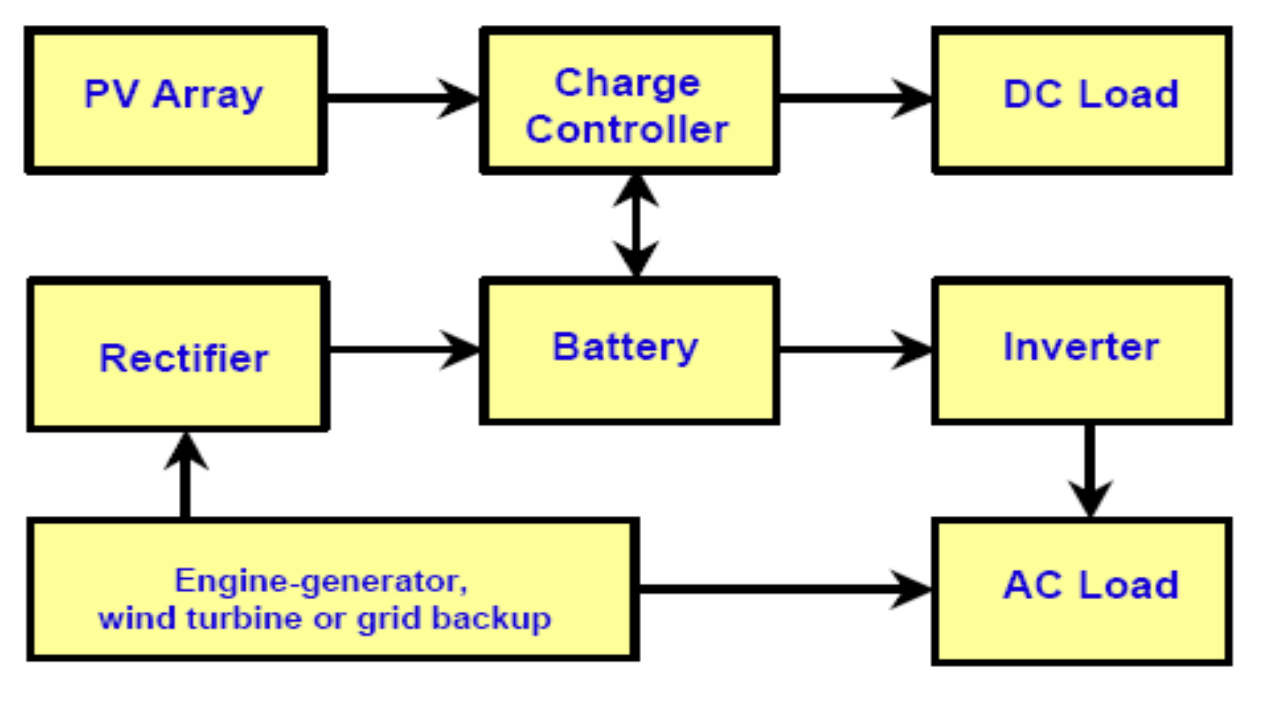

Solar Energy Available

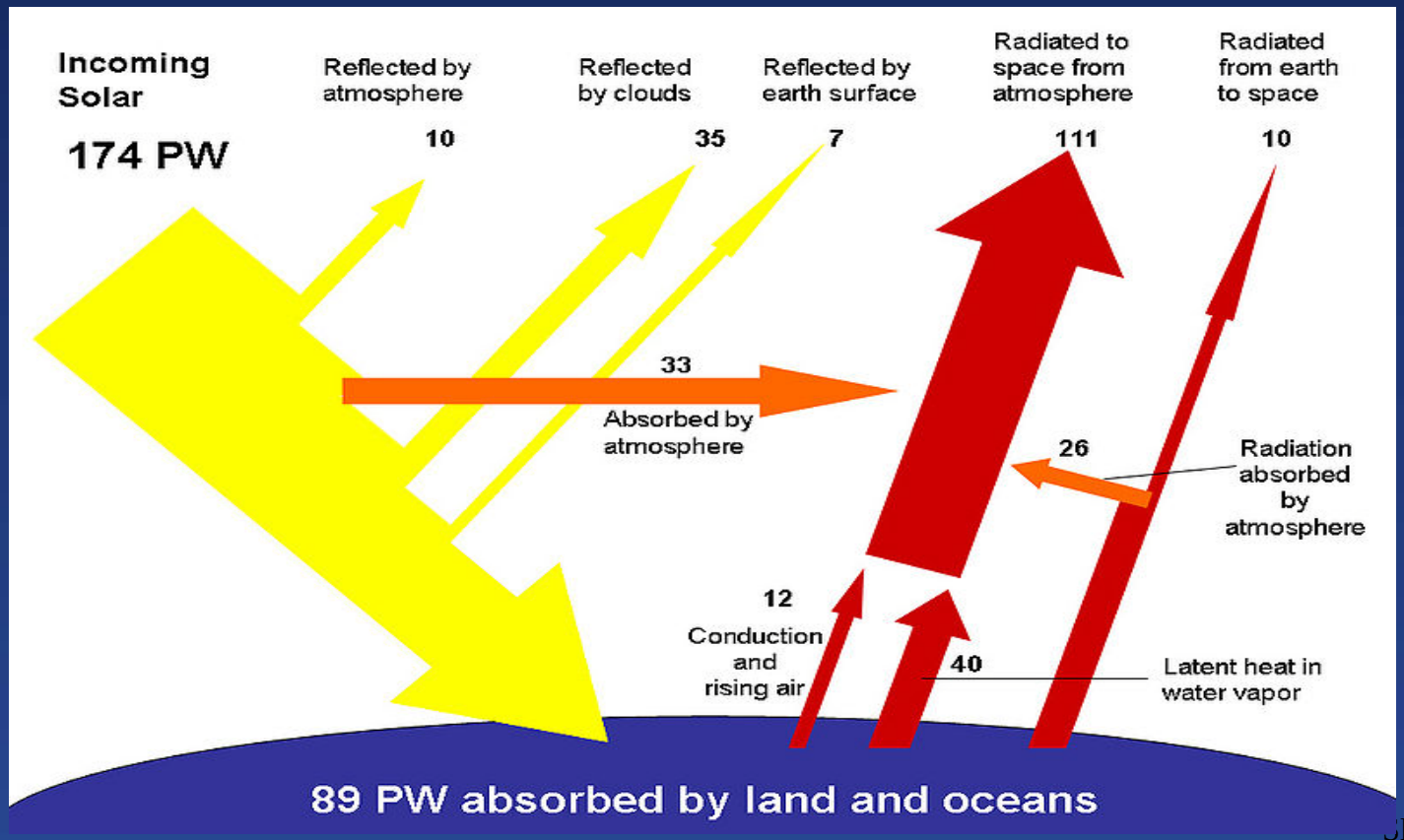

Siting Solar Panels

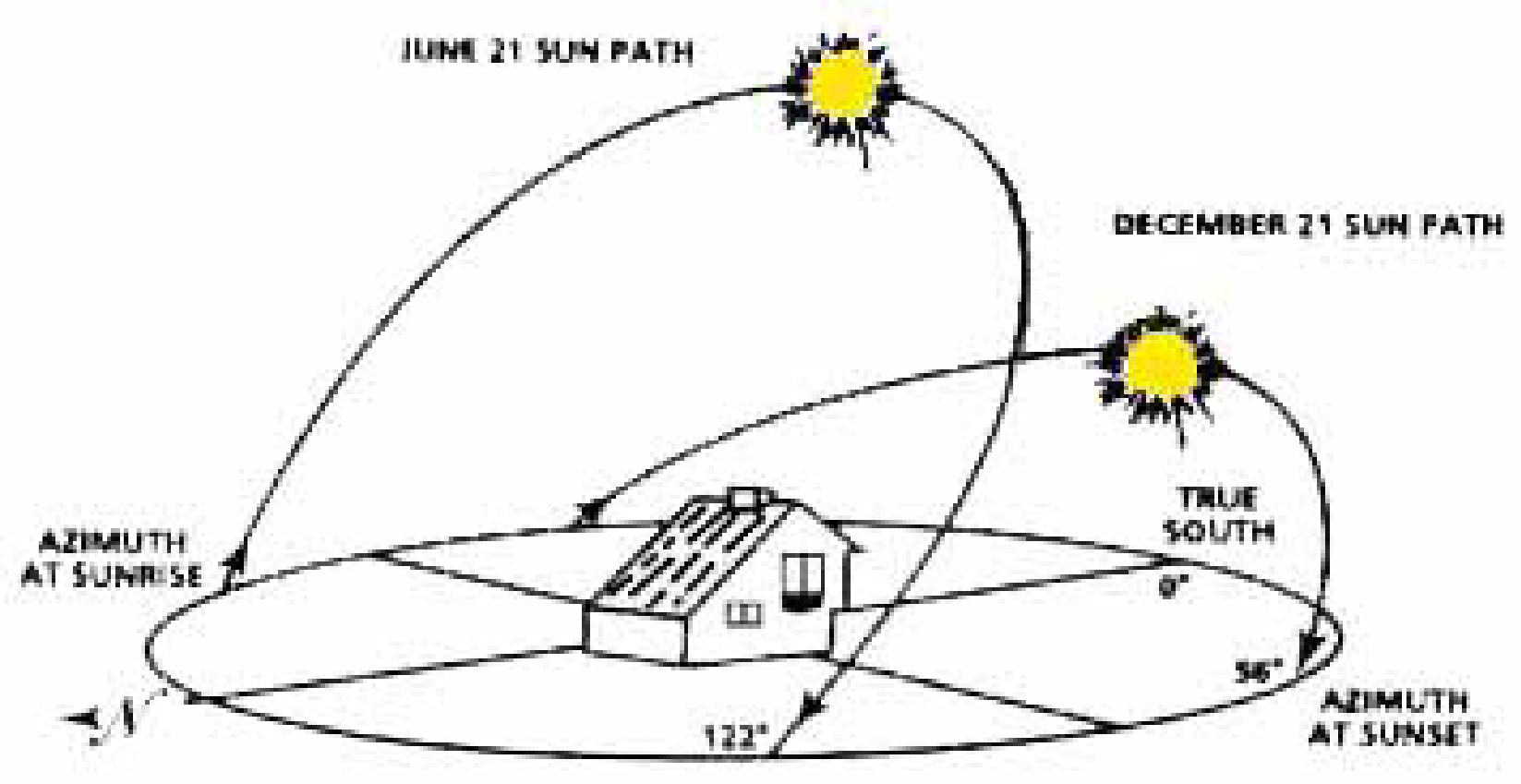

Solar Irradiance

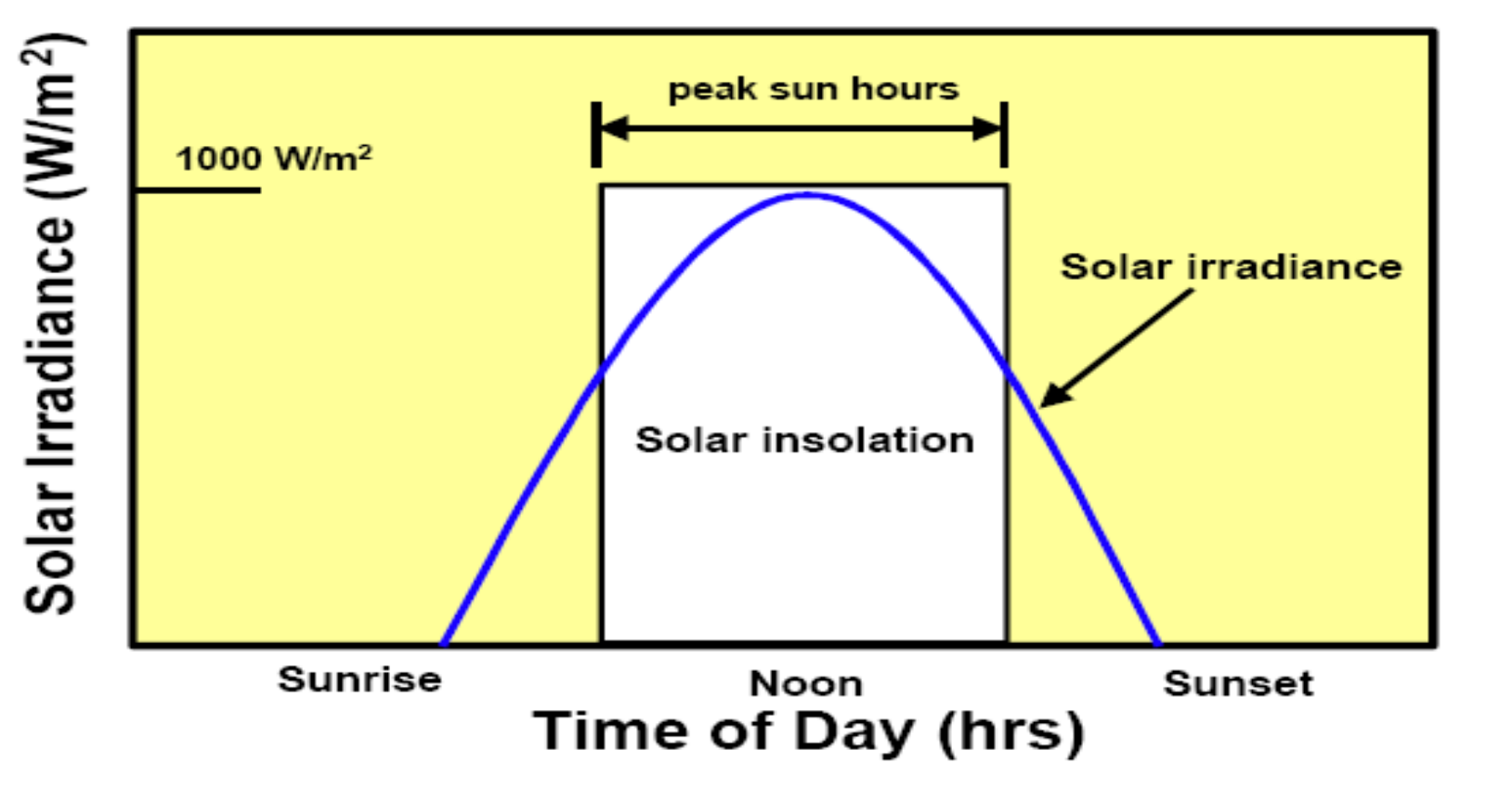

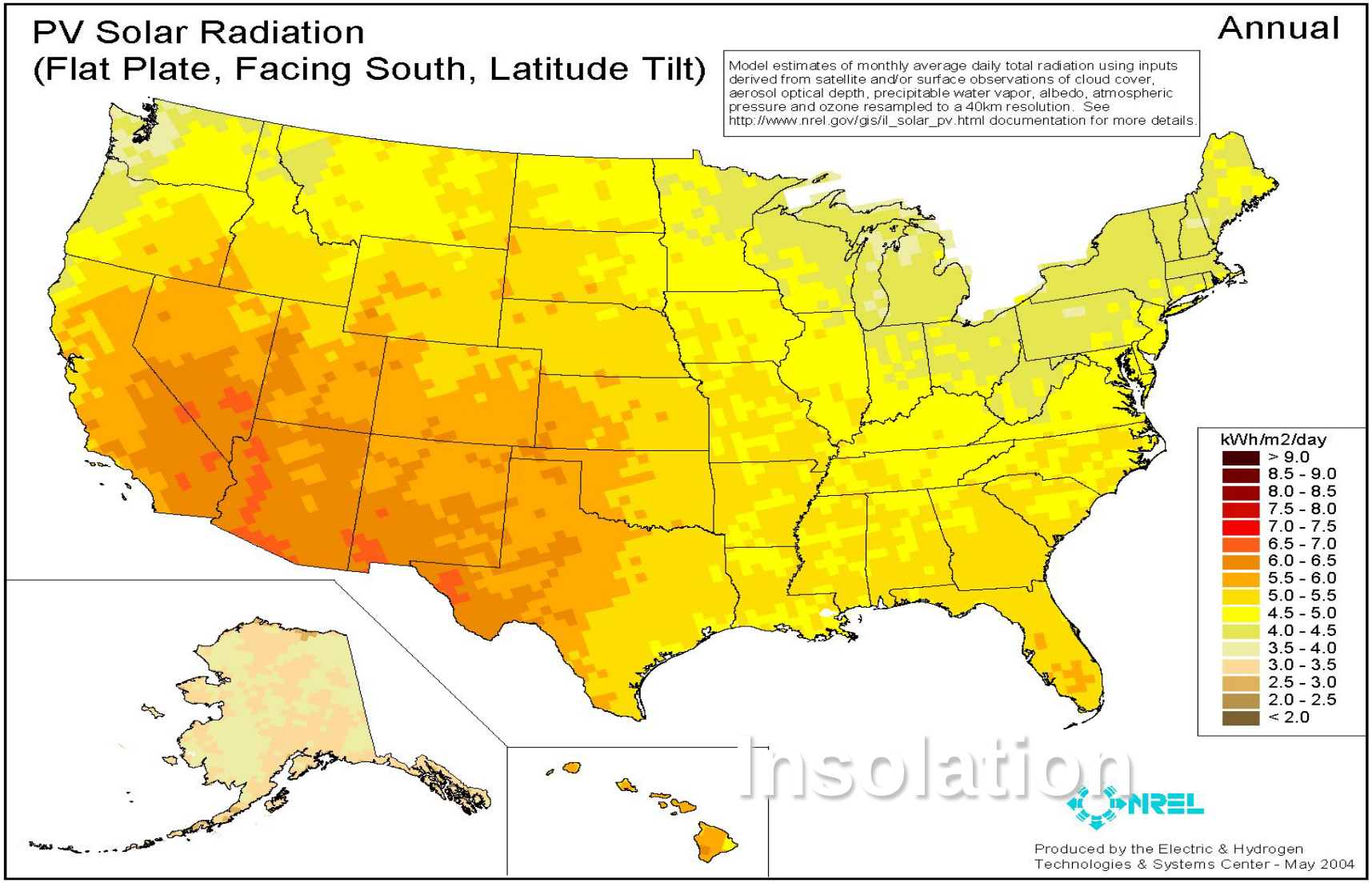
PV Solar Radiation
(Flat Plate, Facing South, Latitude Tilt)
Annual
Model estimates of monthly average daily total radiation using inputs derived from satellite and/or surface observations of cloud cover, aerosol optical depth, precipitable water vapor, albedo, atmospheric pressure and ozone resampled to a 40km resolution. See http://www.nrel.gov/gis/il_solar_pv.html documentation for more details.
kWh/m2/day
> 9.0
8.5 - 9.0
8.0 - 8.5
7.5 - 8.0
7.0 - 7.5
6.5 - 7.0
6.0 - 6.5
5.5 - 6.0
5.0 - 5.5
4.5 - 5.0
4.0 - 4.5
3.5 - 4.0
3.0 - 3.5
2.5 - 3.0
2.0 - 2.5
< 2.0
Insolation
NREL
Produced by the Electric & Hydrogen Technologies & Systems Center - May 2004

Sizing the Array

- Power required
- Location
- PV Efficiency
- Period of peak sun

Solar Energy

- Advantages
  - plentiful sunlight
  - environmentally friendly
  - relatively low O&M
  - may be economically competitive
  - additional power during peak loading times
  - on-site source
- Disadvantages
  - high fixed costs
  - complimentary power supply requirements
  - DC to AC conversion may be required

Summary

- Potential for using one form or another of renewable energy is almost universal, although it may be greater in some areas than others.
- Solar technologies are clean and efficiency is improving.
- Solar technologies are expensive but costs are going down.
- Technologies are most cost-effective where electrical distribution is not available.

One Very Practical Solar Photovoltaic (PV) Application

- Livestock Water Pumping with Solar Energy
- Pumping water for irrigation is generally not practical, except for very small acreages (or very large solar arrays).

Cost

New Mexico NRCS: $5,700 median

One example:

- Solar pumping plant for $6,500:
- 320 watt sharp panels and
- 6SQF-2 Grundfos pump

Cost

Another Example:

Solar pump, well depth < 50' $950

Solar Panels, 100 Watts each $500

  Number required 2

Panel Pole Mount assembly $50

Pump Controller $400

Pipe, wire, and other Appurtances: $260

Total Cost: $2,660

Remote Systems: Avoid Batteries

- All solar water pumping systems use some type of water storage.
- The idea is to store water rather than store electricity in batteries, thereby reducing the cost and complexity of the system.
- A general rule of thumb is to size the tank to hold at least three days worth of water.

Making the Decision

- Analyzing the monthly water demand requirement;
- Conducting a resource assessment;
- Deciding whether a wind or solar water pumping system would be best.

Analyzing the monthly water demand requirement

- Need to know the height the water needs to be lifted
- Need to know the water demand

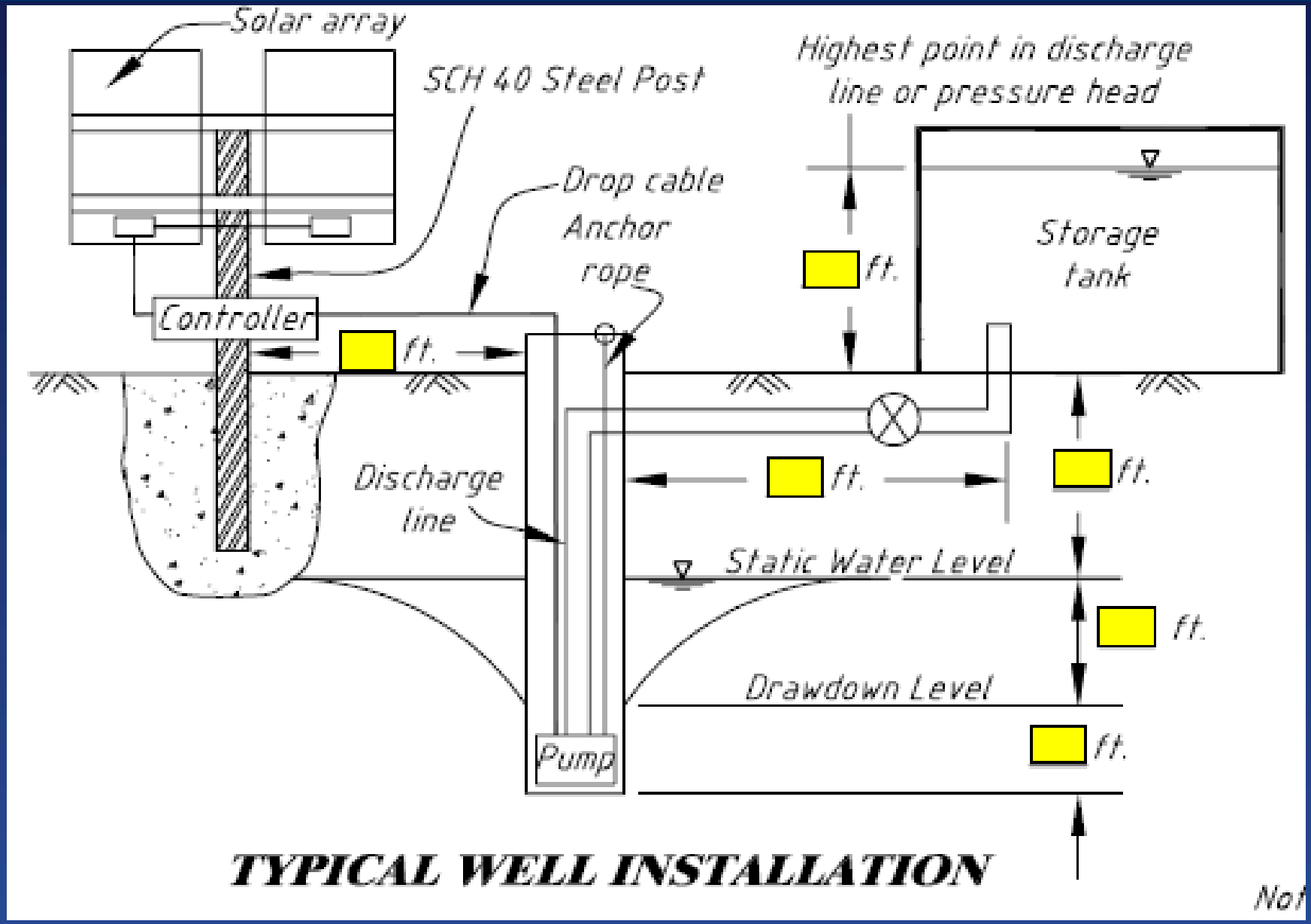
Solar array
SCH 40 Steel Post
Highest point in discharge line or pressure head
Drop cable
Anchor rope
Storage tank
ft.
Controller
ft.
Discharge line
ft.
ft.
Static Water Level
ft.
Drawdown Level
ft.
Pump
TYPICAL WELL INSTALLATION
Not

Water Use Information

Type of Use	Seasonal Water Requirement (Gal./Day)				Comments (# or type of animals, type of irrigation, etc.)
	Summer	Fall	Winter	Spring	
Livestock					
Wildlife					
Irrigation					
Domestic/Potable					
Other					
Total Requirement					

Resource Assessment

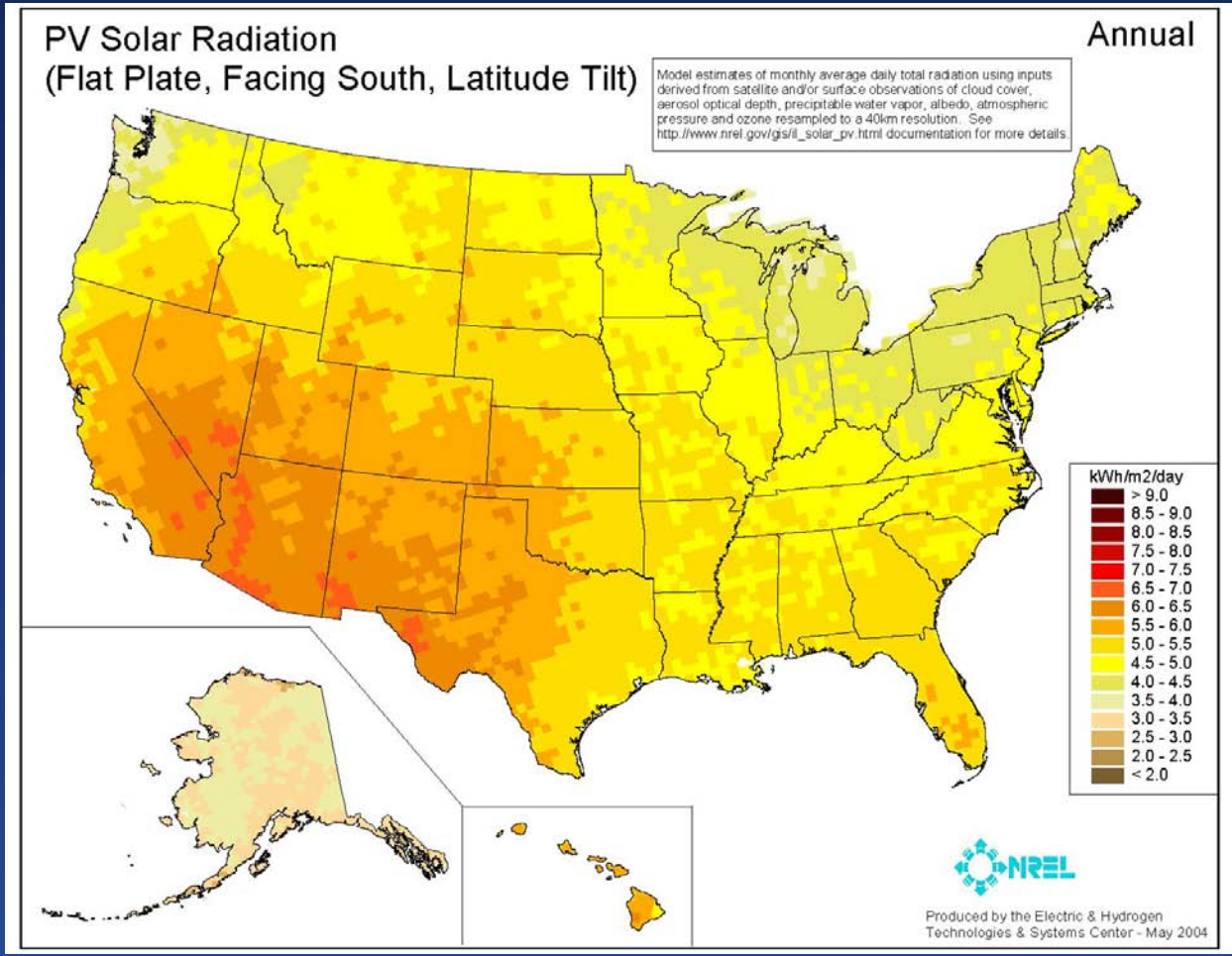

Solar vs Wind

- Solar and Wind resource assessment for locale
- The choice for stand-alone water pumping systems less than 2 kW being predominantly between using mechanical windmills or solar-PV.

Components

- Solar PV module;
- Understanding how controller can affect the decision; and
- Selecting pump type (diaphragm, piston, helical, or centrifugal).

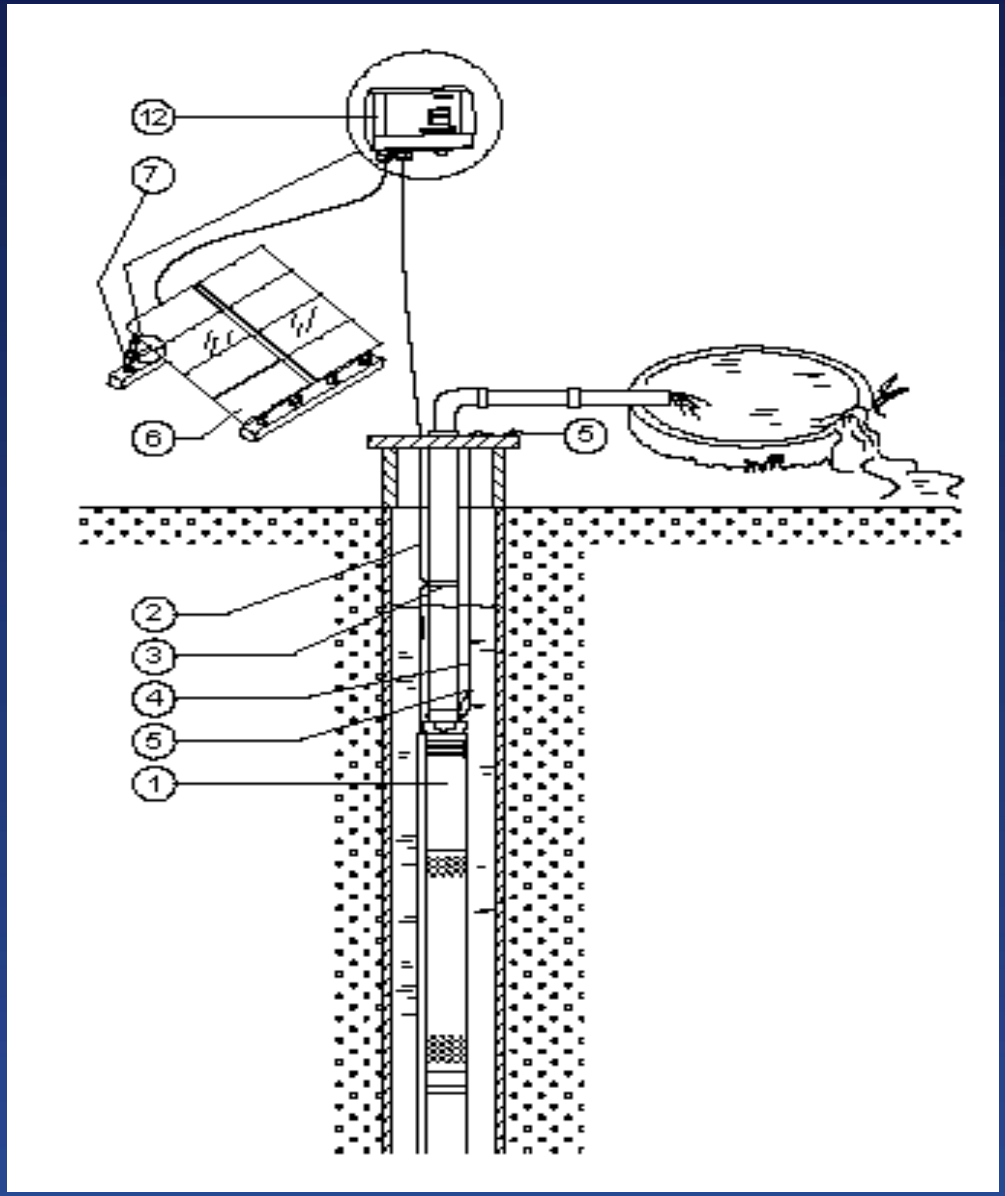
12
7
6
5
2
3
4
5
1

Math Won't Be a Big Part of This Presentation, But….

- 1000 Watts = 1 KiloWatt
- You can add up the "nominal" wattage of solar panels to get the system size.
- Panels have a output voltage rating and the voltage output of a system depends on the wiring

.

Determining the type of PV module

Currently there are two types of PV modules that are used for solar-PV water pumping:

- multi-crystalline and
- thin film

High voltage PV modules are only an advantage if the pump motor requires high voltage.

Diaphragm pump motors are rated at 24V, so they don’t require high voltage modules.

Determining the type of PV module

- Whether a passive or motorized tracking system is used, it is usually better to just add more PV modules in a fixed array than installing a tracking system unless the PV array is rated higher than 500W.

DEC 14 2006

JUN 29 2007

Pump and Charge Controllers

Pump and Charge Controllers

- A charge controller is installed when batteries are used in the system. Its purpose is to keep the batteries from overcharging or becoming completely discharged.

Pump Controllers

Pump Controllers

- Controllers for PV water pumping systems can range from not using any controller to sophisticated smart controllers.
- The pump controller is an electronic linear current booster that acts as an interface between the PV array and the water pump.
- It operates very much like an automatic transmission, providing optimum power to the pump despite wide variations in energy production from the sun.
- It is particularly helpful in starting the pump in low light conditions.

Solar-PV Pump Controllers

"Part of" Helical Pump Controller

Centrifugal (AC Motor) Controller

Diaphragm Pump Controller

Pump Controllers

Pump Controllers

- The voltage output of a PV is relatively fixed as the level of sunshine varies.
- Motors on the other hand are basically constant current devices with the voltage varying with power and speed.
- The controller acts as an automatically adjusting dc/dc converter to convert high voltage/low current pv array outputs (low sun conditions) to lower voltage/higher current to better operate a dc motor

Pump Controllers

Pump Controllers

- One helical pump manufacturer (Grundfos) has embedded most of the controller function inside the submersible motor casing.
- This embedded controller also has the capability of determining if input power is DC or single phase AC and if single phase AC, it is rectified to DC electricity before connecting to DC motor.
- This means that water can be pumped on cloudy days by switching from PV array to a gasoline generator.

Selecting pump type

diaphragm, piston, helical, or centrifugal

- Conventional pumps require steady AC current that utility lines or generators supply.
- Solar pumps use DC current from batteries and/or PV panels.
- Solar pumps are designed to work effectively during low-light conditions, at reduced voltage, without stalling or overheating.

Selecting pump type
diaphragm, piston, helical, or centrifugal

- For the past fifteen years, solar-PV (photo-voltaic) water pumping systems have been installed with either diaphragm, centrifugal, or piston pumps.
- The diaphragm pumps have been used successfully for small daily water volumes and shallow pumping depths (125 to 400 gallons/day and 15 to 200 feet pumping depths).
- The centrifugal pumps have been used for larger daily water volumes and moderate pumping depths (500 to 2,500 gallons/day and 15 to 250 feet pumping depths).

Types of Solar-PV Pumps

Selecting pump type
diaphragm, piston, helical, or centrifugal

- Lastly, the piston pumps (with a pump jack) have been used to pump water for small to moderate daily water volumes and deep pumping depths (125 to 1,250 gallons/day and 300 to 1000 feet pumping depths).
- Helical Pumps: rapid adoption since 2002. Pumping depths from 150 to 500 feet.

Helical Pump

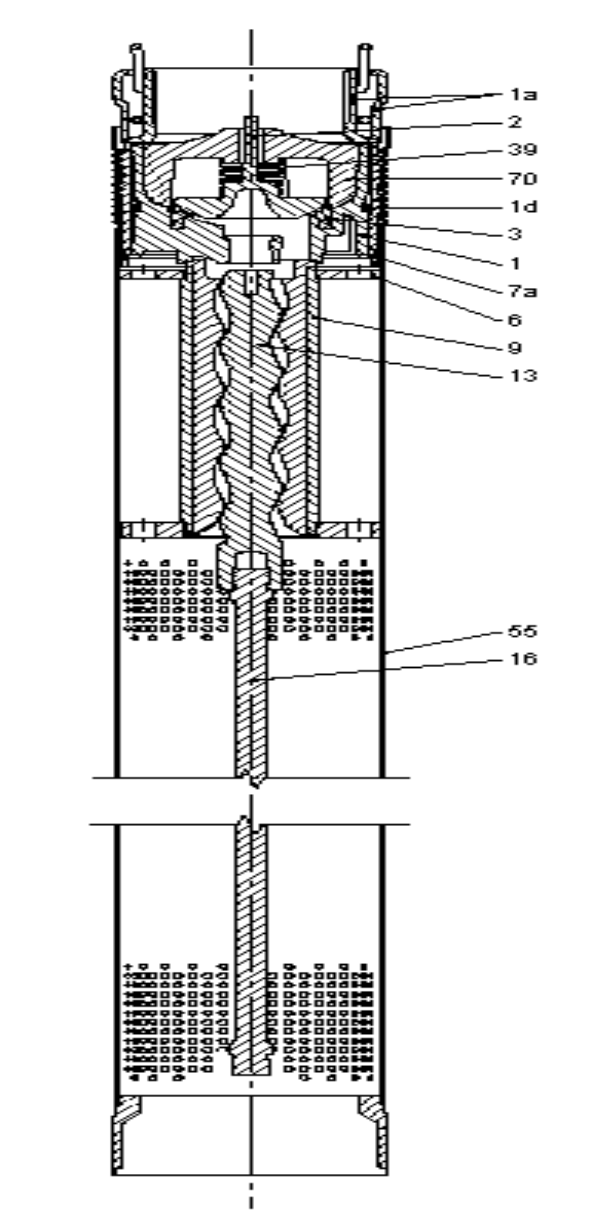

Summary

- Solar-PV water pumping systems less than 1.5 kW are more likely to be used in U.S. than wind powered water pumping systems due to:
  - a better match to water demand,
  - less maintenance requirements (e.g. fewer moving parts), and
  - a larger area of land with a good solar resource than with a good wind resource.
- As power requirements increase however, a wind only or a hybrid wind/solar water pumping system is desirable until the price per Watt for solar-PV modules can be decreased significantly and/or efficiency of Solar-PV modules can be improved significantly.

Summary

- Analyzing the monthly water demand requirement;
- Conducting a resource assessment;
- Deciding whether a wind or solar water pumping system would be best.

Summary

Three Components of a livestock watering system

- Solar Panels
- Pump Controller
- Pump

National Energy Technology Development Team

- Stefanie Aschmann, Team Leader
- Curtis Framel, Energy Specialist

Supporting NRCS staff with energy resource concerns and information

NRCS Solar Applications and Information Resources

Small Farm Application

- Conservation Innovation Grant, New Mexico

- Solar Hydronic/Radiant Heating System
- Grid Tied Photovoltaic

United States Department of Agriculture
Natural Resources Conservation Service

United States Department of Agriculture
Natural Resources Conservation Service

United States Department of Agriculture
Natural Resources Conservation Service

Stock Pond Watering Systems

- Yolo County and Fresno, California Field Offices
- Environmental Quality Incentive Program
- Engineering Support From Office staff
- Good Partnerships

375 Watt system runs the Grundfos pump. This pump delivers 10 GPM to the tank. Lift is only approximately 30 ft.

2500 Gallon tank feeds1 livestock and 1 wildlife trough

175 watts powering a Grundfos pump. The well is only 30 ft deep so the entire lift is approximately 50 ft.

1050 watts powering a Grundfos pump at 5 GPM. This feeds an 8,000 gallon tank with 340 ft of lift and 760 ft away.

Picture of an old 8000 gallon milk tank with 500 gallon concrete trough. This system feeds 7 troughs in 7 different fields all done by gravity.

United States Department of Agriculture
Natural Resources Conservation Service

Solar Websites

- www.builditsolar.com (DIY Solar Projects)
- www.findsolar.com (Directory/Tools/Costs)
- www.homepower.com (Dealers/Installers)
- www.passivehouse.us (Energy Design)
- www.pvwatts.org (PV Power Estimates)
- www.realgoods.com (Solar Products)
- www.solar-rating.org (System Certify)

Database of Solar Incentives and Renewable Energy

www.dsireusa.org

- Each State-Financial Incentives from city/county/state/federal governments
- State Rules, Regulations and Policies
- Utility Incentives

Additional Information Resources

- NRCS energy self assessment tools
  - http://www.ruralenergy.wisc.edu/

- National Center for Appropriate Technology
  - http://attra.ncat.org direct tech assistance, publications and tools. 800-346-9140 (English) or 800-411-3222 (Spanish) solar assistance

Solar Energy Opportunities

- Technologies are advancing rapidly
  - Decreasing costs
  - Increasing efficiency
- Finally, check the following web sites:

http://www.nrel.gov/

http://www.eere.energy.gov/

Agricultural Applications

- Pump water
- Dry grain
- Heat greenhouse
- Generate electricity
- Space heating

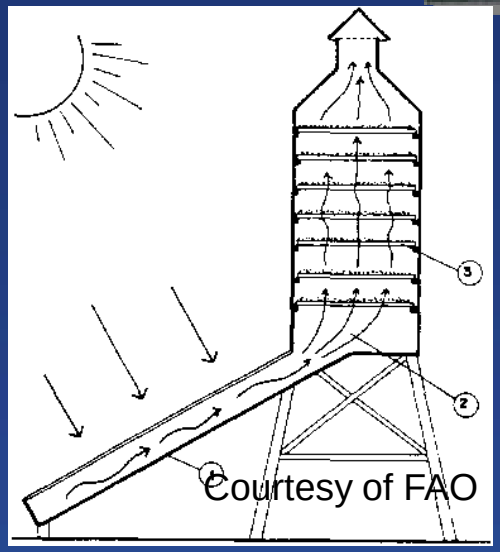

Questions?